ArcFil Pro

Art. No.: 35 30

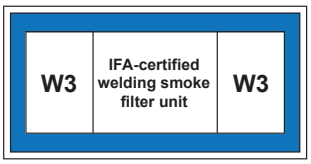

Applications

- High levels of smoke and dust
- Welding and grinding shops
- Training centres and robotic welding lines
- Laser, plasma and flame cutting systems
- Can be installed outdoors

Benefits

- Contamination-free dust collection due to compressed air fixation of dust collection containers
- Uninterrupted continuous operation due to automatic differential pressure-controlled filter cleaning
- Little noise emission due to a low noise level
- Quick and simple set up, delivered ready to plug in with forklift pockets and lifting eyes *[1]
- Considerable energy cost savings by using the automatic extraction volume control
- Best health protection for employees by use of KemTex® ePTFE cartridges with surface filtration
- Recirculation is possible even when using chrome-nickel steel thanks to W3 certification

Properties

- Control via touch screen
- KemTex® ePTFE filter cartridges
- Automatic extraction volume control (optional)
- Automatic filter cleaning on required basis
- Control via compact touch information display
- Low noise emissions thanks to extremely low noise level

Accessories

- Dosing unit for pre-coating the filter cartridges
- Automatic extraction volume control
- Fleet management, remote maintenance and pre-noise maintenance using autarkic networking via mobile radio to the KEMPER cloud
- Spark separator – SparkTrap
- Automatic start-stop
- Weatherproof housing for outdoor installation

Technical Data

Filter	
Filter stages	1
Filter method	Cleanable filter
Filter cleaning method	Rotating nozzle
Filter surface	10 m²
Number filter elements	4
Filter surface total	40 m²
Type of filter	Filter cartridge
Filter material	ePTFE membrane
Filter efficiency	> 99.99 %
Dust classification	M
Basic data	
Extraction capacity	2000 - 2880 m³/h
Vacuum	2450 - 1750 Pa
Weight	590 kg
Motor power	3 kW
Power supply	3 x 400 V / 50 Hz
Rated current	6.5 A
Noise level	65 dB(A)
Additional information	
Fan type	Radial fan, belt driven
Compressed air supply	5 - 6 bar
Air outlet	355 mm
Air intake	355 mm
Capacity Dust collection container	34 l

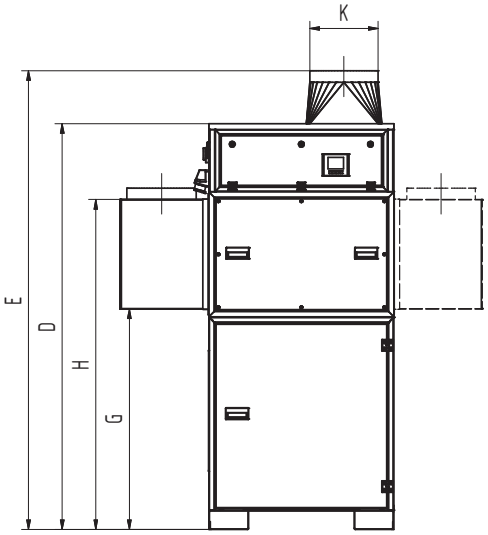

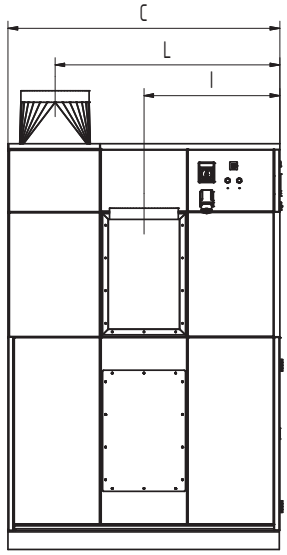

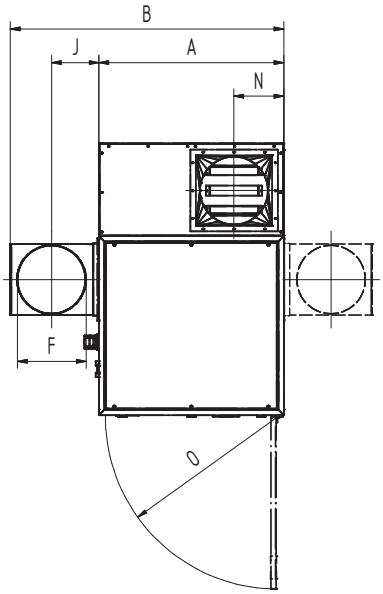

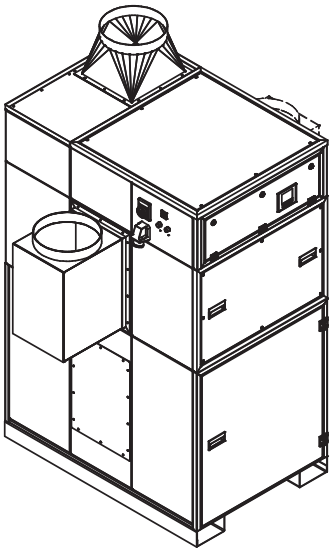

Technical Data

Dimensions	
A	962 mm
B	1402 mm
C	1413 mm
D	2110 mm
E	2410 mm
F	355 mm
G	1146 mm
H	1716 mm
I	706 mm
J	225 mm
K	355 mm
L	1170 mm
N	260 mm
O	896 mm

The shown transition pieces are optional

Pressure-volume graph
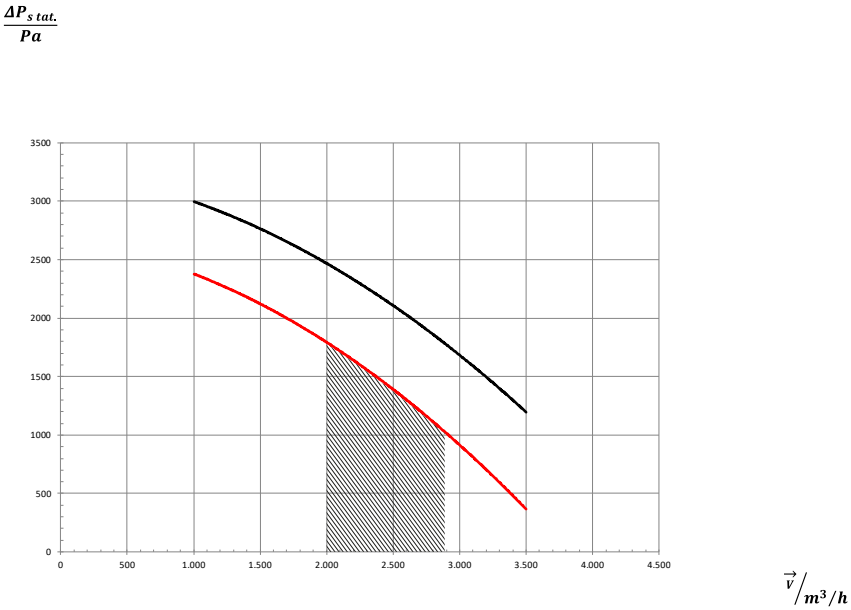
- Fan characteristic curve
- Working pressure increase
- Recommended Use