ArcFil Pro

Art. No.: 35 40

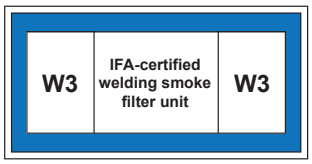

Applications

- High levels of smoke and dust
- Welding and grinding shops
- Training centres and robotic welding lines
- Laser, plasma and flame cutting systems
- Can be installed outdoors

Benefits

- Contamination-free dust collection due to compressed air fixation of dust collection containers
- Uninterrupted continuous operation due to automatic differential pressure-controlled filter cleaning
- Little noise emission due to a low noise level
- Quick and simple set up, delivered ready to plug in with forklift pockets and lifting eyes *[1]
- Considerable energy cost savings by using the automatic extraction volume control
- Best health protection for employees by use of KemTex® ePTFE cartridges with surface filtration
- Recirculation is possible even when using chrome-nickel steel thanks to W3 certification

Properties

- Control via touch screen
- KemTex® ePTFE filter cartridges
- Automatic extraction volume control (optional)
- Automatic filter cleaning on required basis
- Control via compact touch information display
- Low noise emissions thanks to extremely low noise level

Accessories

- Dosing unit for pre-coating the filter cartridges
- Automatic extraction volume control
- Fleet management, remote maintenance and pre-noise maintenance using autarkic networking via mobile radio to the KEMPER cloud
- Spark separator – SparkTrap
- Automatic start-stop
- Weatherproof housing for outdoor installation

Technical Data

Filter	
Filter stages	1
Filter method	Cleanable filter
Filter surface	10 m²
Number filter elements	6
Filter surface total	60 m²
Type of filter	Filter cartridge
Filter material	ePTFE membrane
Dust classification	M
Basic data	
Extraction capacity	2750 - 3960 m³/h
Vacuum	2650 - 1800 Pa
Weight	630 kg
Motor power	4 kW
Power supply	3 x 400 V / 50 Hz
Rated current	7.8 A
Noise level	65 dB(A)
Additional information	
Fan type	Radial fan, belt driven
Compressed air supply	5 - 6 bar
Air outlet	355 mm
Air intake	355 mm
Capacity Dust collection container	2 x 34 l

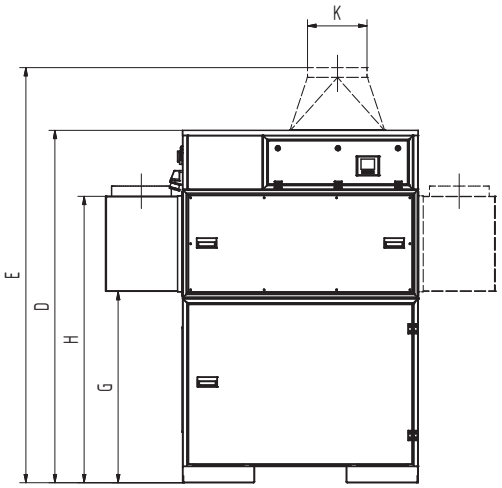

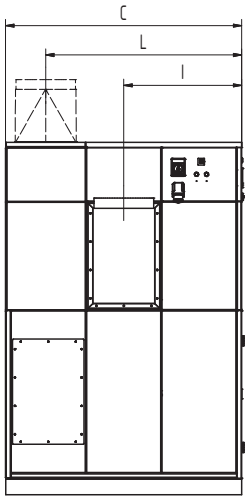

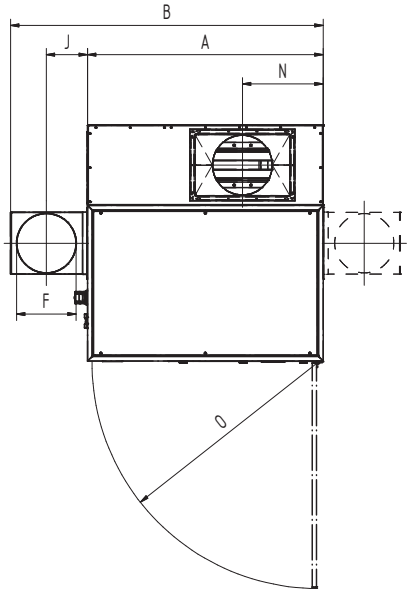

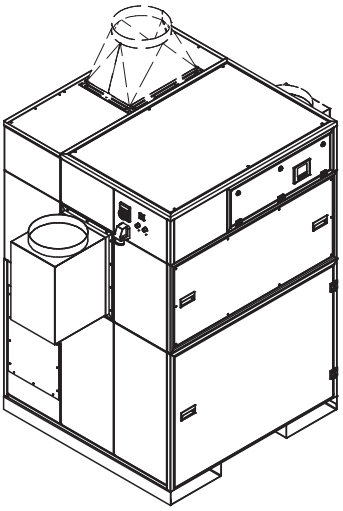

Technical Data

Dimensions	
A	1413 mm
B	1853 mm
C	1413 mm
D	2110 mm
E	2510 mm
F	355 mm
G	1146 mm
H	1716 mm
I	706 mm
J	225 mm
K	355 mm
L	1175 mm
N	484 mm
O	1347 mm

The shown transition pieces are optional

Pressure-volume graph
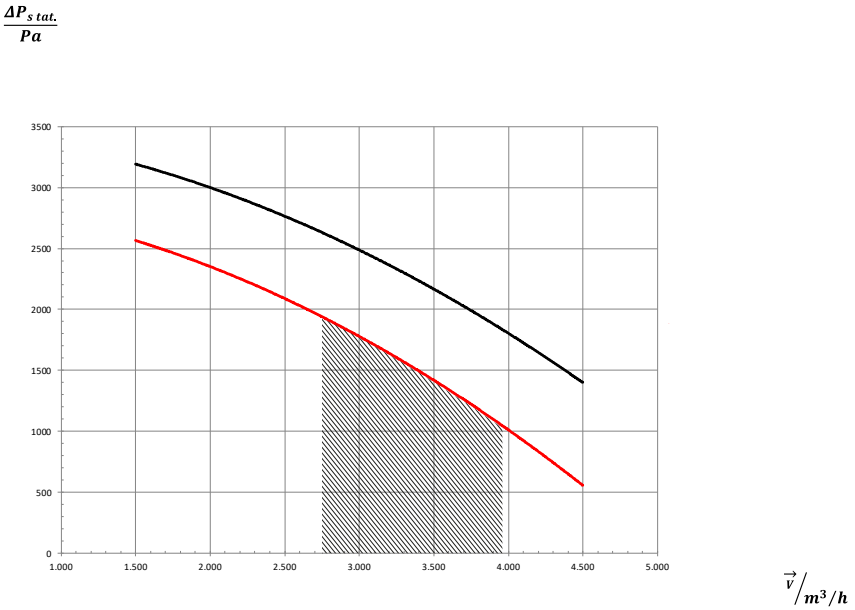
- Fan characteristic curve
- Working pressure increase
- Recommended Use